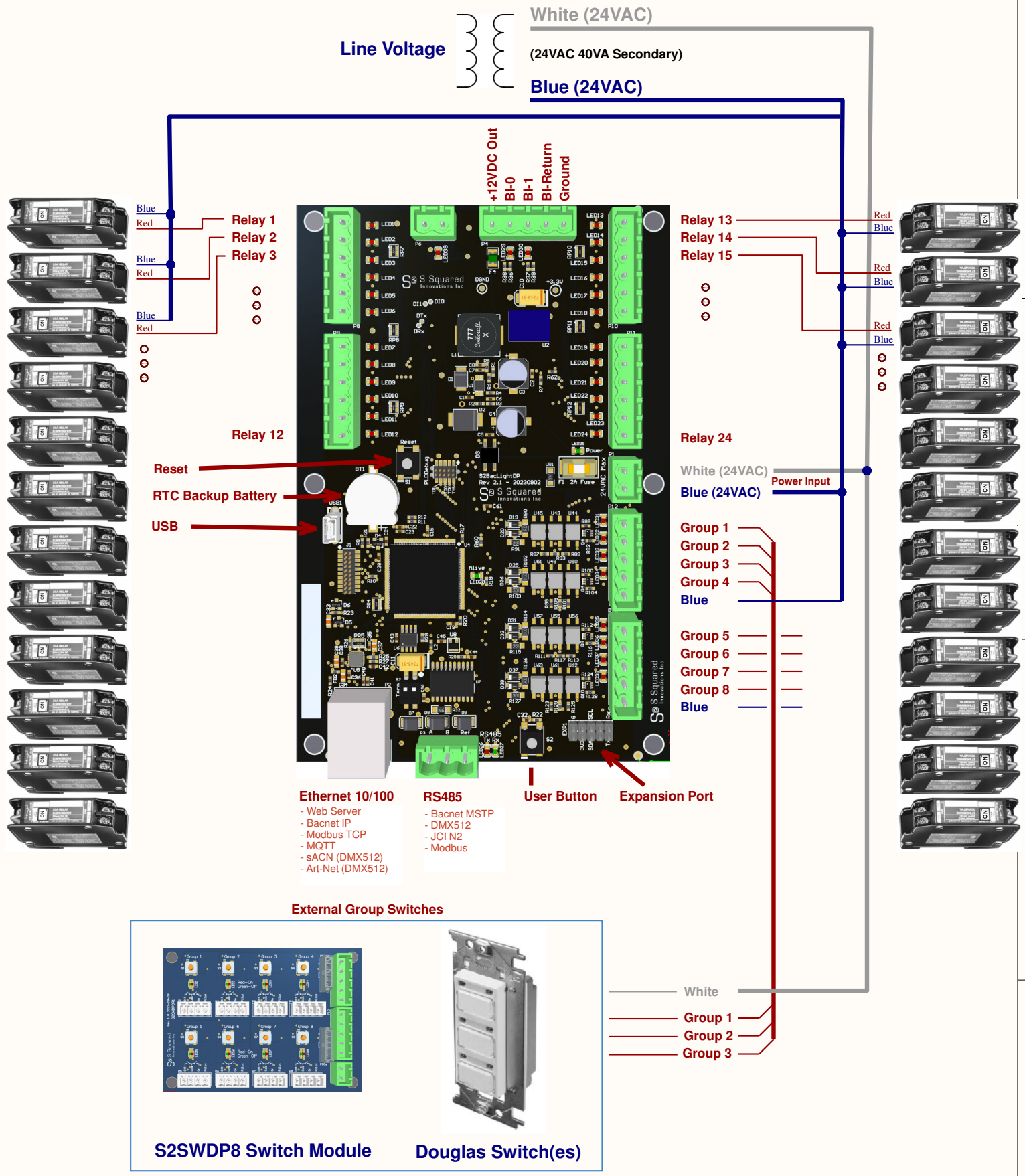

Title: S2BACLightDP Generic Wiring Diagram		
Rev: 1.0	Drawn by: SSS	
Sheet: 1 of 1	Date: 2024-10-08 1:37:51 PM	
Filename: S2BACLightDP_GenericWiring_A.SchDoc		